www.ersatzteil-service.de www.ersatzteilplan.de

OPERATOR'S MANUAL

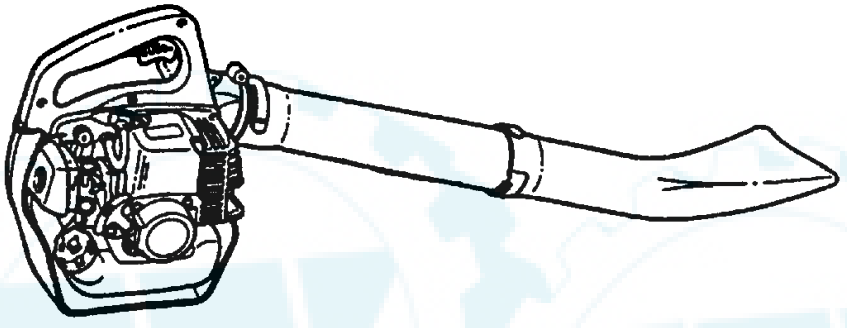

POWER BLOWER

9410M OPTIONAL VACUUM KIT

WARNING ⚠ DANGER

READ INSTRUCTIONS CAREFULLY AND FOLLOW RULES FOR SAFE OPERATION. FAILURE TO DO SO COULD RESULT IN SERIOUS INJURY.

Mantis®

Ihr Ersatzteilspezialist im Internet

www.ersatzteil-service.de www.ersatzteilplan.de

Mantis®

DIVISION OF SCHILLER-PFEIFFER, INCORPORATED
1028 Street Road, Southampton, PA 18966, U.S.A.
Phone: 215-355-9700 Fax: 215-364-1409

X7501130611
Printed in U.S.A.

99922202750
06/96

Ihr Ersatzteilspezialist im Internet

www.ersatzteil-service.de www.ersatzteilplan.de

SAFETY

WARNING ⚠ DANGER

BLOWER USERS RISK INJURY TO THEMSELVES AND OTHERS IF THE BLOWER IS USED IMPROPERLY, AND/OR SAFETY PRECAUTIONS ARE NOT FOLLOWED. PROPER CLOTHING AND SAFETY GEAR MUST BE WORN WHEN OPERATING BLOWER.

OPERATOR SAFETY

- Read this Operator's Manual carefully. Be sure you understand how to operate this unit properly before you use it.

Wear non-skid sole shoes. Do not wear open-toed shoes or operate unit while bare footed.

- Wear proper clothing to protect legs and other exposed parts of your body.
- Wear eye, breathing and hearing protection devises.
- Use caution when handling fuel. Put the gas caps back tightly on both the gas can and the blower fuel tank. Move at least 10 feet from the re-fueling point and be sure there is no leakage of fuel from the gas cap or the fuel system before starting the engine. Do not refuel indoors or in an inadequately ventilated area.
- Operate this gasoline engine powered equipment in a well-ventilated area only.
- Do not operate this unit in closed areas - such as garages, inside buildings, sheds, etc.

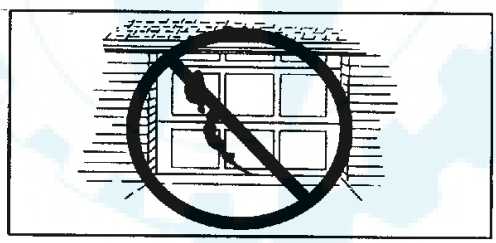

- Start the unit on the ground with the throttle set at idle. Do not start if the pipe is obstructed by the ground or any other object.
- Inspect area where blower will be used. Remove stones, metal objects and any other object that could cause injury or damage the blower.
- Do not allow other persons or pets in the area when starting or using the blower.
- Do not point blower pipe in the direction of people or animals.
- Keep a firm grip on the blower at all times.

REDUCE NOISE

NOTE
Before operating the blower, check and follow local regulations concerning sound level and hours of operation.

- Avoid using power blowers when people are likely to be disturbed, such as late at night or early in the morning. As a rule, operate power blowers between 9 a.m. and 5 p.m. on weekdays and weekends.
- Operate the blower at the lowest possible throttle setting that gets the job done. If you loosen compacted leaves, grass or debris with a broom or a rake, using full throttle is not necessary.
- Make sure the muffler works well. Also check the air intakes and the air filter to make sure the blower is working properly.
- Use only one piece of equipment at a time.

REDUCE CHANCES OF DAMAGE

- Before starting the job, check wind direction. Avoid blowing in the direction of open doors and windows, cars, pets, children or anything that could be harmed by blowing dust, leaves and debris.
- Use the full nozzle extension so the air stream is close to the ground. This will get the job done quicker without kicking up a lot of dust.
- In dusty conditions, wet down surfaces or use mister attachments.
- Clean up after the job is done. Make sure no debris has blown onto someone else's property. Collect any trash and put it in a proper container.

Ihr Ersatzteilspezialist im Internet

www.ersatzteil-service.de www.ersatzteilplan.de

OPERATOR SAFETY

PROTECTIVE EQUIPMENT

- Wear eye protection goggles that meet ANSI Z87.1 requirements. Goggles meeting the requirements have the mark "Z87" stamped on them.
- Wear hearing protection at all times. If this guide-line is not followed, hearing loss can occur.
- Snug fitting, durable clothing should be worn. Pants should have long legs, DO NOT WEAR SHORTS. Do not wear loose fitting clothing, scarfs, neckties, jewelry or any item that may become tangled in surrounding growth or the blower itself.
- Wear shoes with non-skid soles. DO NOT wear open toed shoes or operate unit bare footed.
- Wear no-slip, heavy duty work gloves to improve your grip on the trimmer handles. The gloves also help reduce the transmission of machine vibration to your hands.

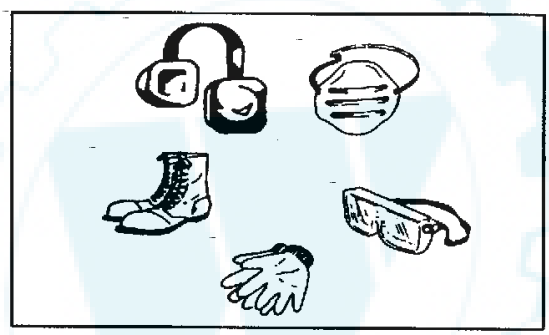

PROTECTING OTHERS

Spectators, children, fellow workers and animals must be warned to come no nearer than 50 feet while the blower is in use. People working in the area near you should wear the same protective equipment as the operator.

PHYSICAL CONDITION

Your judgement and/or dexterity may be impaired if you are ill, are taking medication, and/or have taken alcohol or other substances known to affect the way you would normally function. Operate this unit only if you are in good physical and mental health.

VIBRATION AND COLD

- It is believed that a condition called Raynaud's Phenomenon, which affects the fingers of certain individuals may be brought about by exposure to vibration and cold. Exposure to vibration and cold may cause tingling and burning followed by loss of color and numbness in the fingers. The following precautions are strongly recommended because the minimum exposure which might trigger the ailment is unknown.
- Keep your body warm, especially the head and neck, feet and ankles and hands and wrists.
- Maintain good blood circulation by performing vigorous arm exercises during frequent work breaks and also by not smoking.
- Limit the number of hours of operation. Try to fill each day with jobs where operating the blower or other hand-held power equipment is not required.
- If you experience discomfort, redness and swelling of the fingers followed by whitening and loss of feeling, consult your physician before further exposing yourself to cold and vibration.

Ihr Ersatzteilspezialist im Internet

www.ersatzteil-service.de www.ersatzteilplan.de

DESCRIPTION

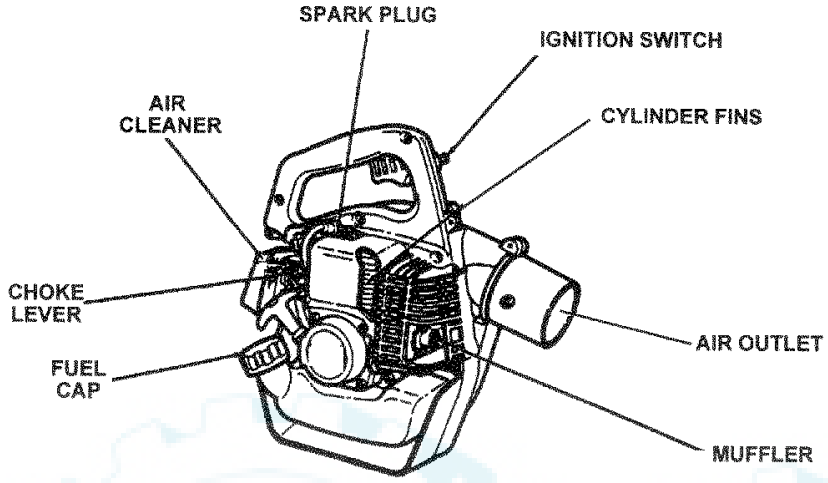

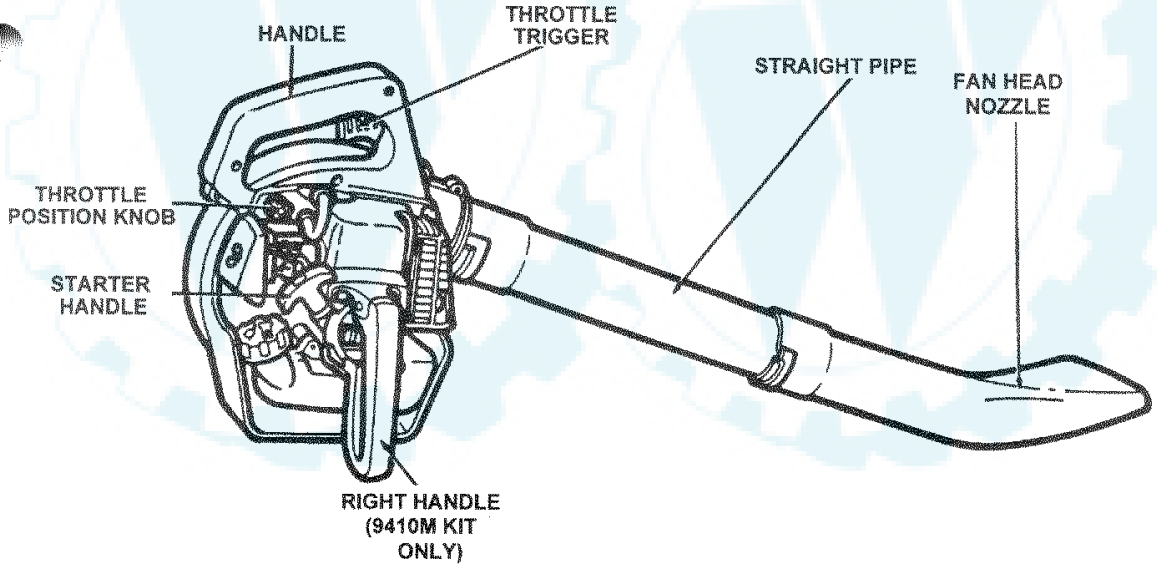

Ihr Ersatzteilspezialist im Internet

www.ersatzteil-service.de www.ersatzteilplan.de

DESCRIPTION

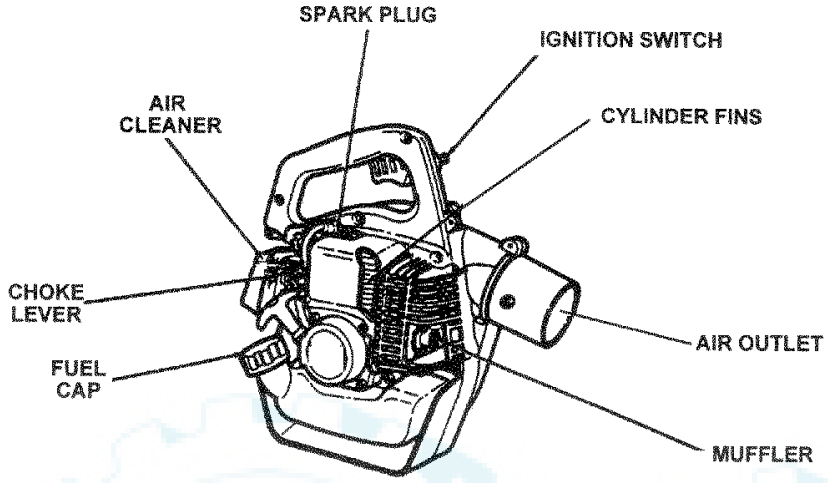

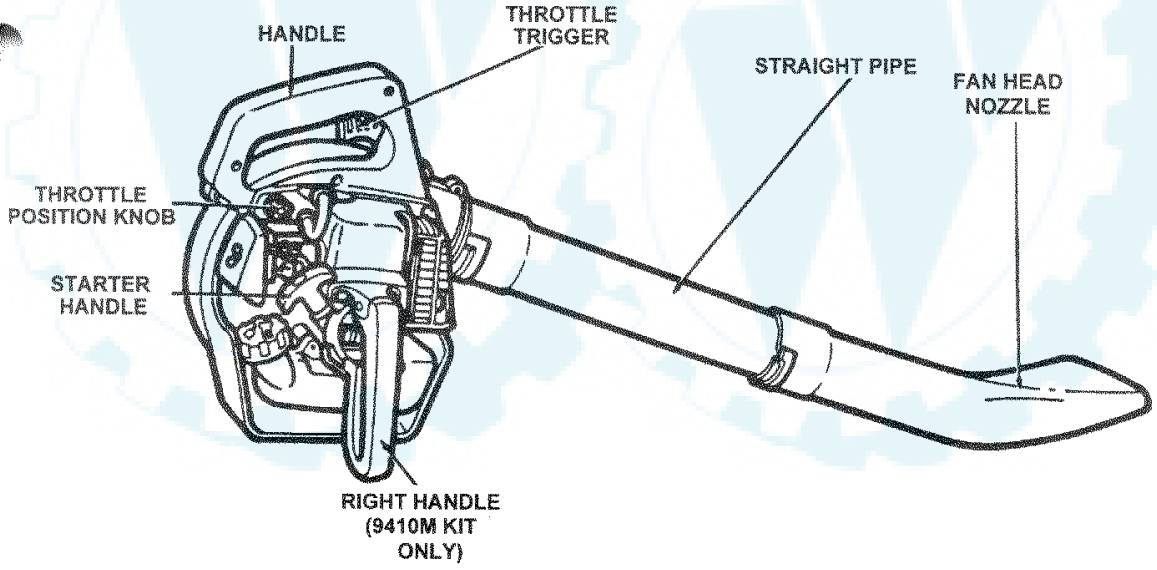

Ihr Ersatzteilspezialist im Internet

www.ersatzteil-service.de www.ersatzteilplan.de

OPERATION

2. Push purge bulb 3-4 times (or until fuel is visible in fuel return line).

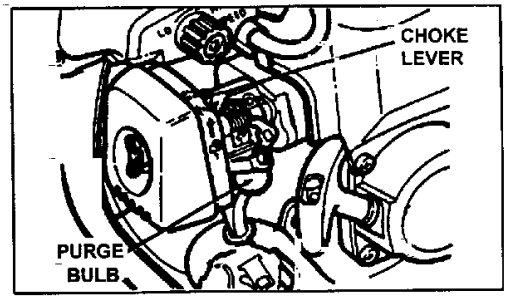

3. Close choke and pull starter handle until engine fires.

4. Open choke and if necessary, restart engine.

> NOTE
> Allow engine to warm up before use.

STARTING WARM ENGINE

1. Move ignition switch to start, pull starter handle one to three times and engine should fire. Do not use choke.

> NOTE
> If engine does not start after 3 pulls, use cold start procedures.

STOPPING ENGINE

1. Release throttle trigger and allow engine to run at idle for a few minutes.

2. Move ignition switch to "STOP" position.

> **WARNING ⚠ DANGER**
> **IF ENGINE DOES NOT STOP, SHIFT CHOKE LEVER TO CLOSED POSITION.**
> **CHECK AND REPAIR IGNITION SWITCH BEFORE STARTING ENGINE AGAIN.**

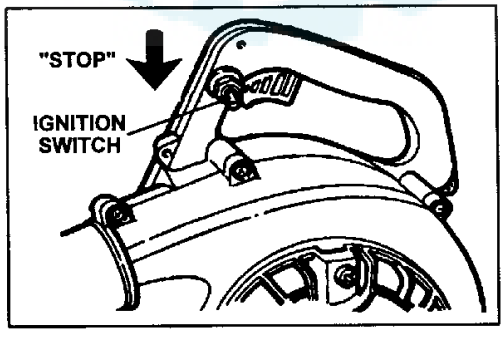

OPERATING BLOWER

> **WARNING ⚠ DANGER**
> - **ALWAYS WEAR SAFTY GLASSES AND USE A FACE FILTER MASK. (READ THE SAFETY SECTION CAREFULLY.)**
> - **DO NOT POINT THE BLOWER PIPE IN THE DIRECTION OF PEOPLE OR PETS.**

> **IMPORTANT**
> Do not block blower pipe to avoid engine damage due to over revving.

1 Allow the engine to warm up at a fast idle for a few minutes.

> NOTE
> The blower can be run at any speed between 2500 RPM to 7000 RPM. The velocity of the air stream can therefore easily be controlled from a mild flow to a high speed blast moving at approximately [107 mph (47 m/sec)] which will move debris ranging from garden leaves to bottles and other debris that can be accumulated in stadiums.

> NOTE
> Never use a higher speed setting than necessary to perform a task. Remember, the higher the engine speed, the louder the blower noise.

> NOTE
> Use a low speed to blow dry leaves from a lawn or flower bed. Additional speed may be necessary to clean grass and leaves from walks, patios and drives or to move gravel, dirt, snow, bottles or cans from a driveway, street, parking lot or stadium.

2. Set engine speed with throttle position knob.

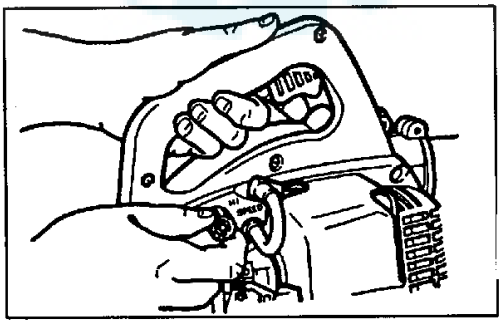

Ihr Ersatzteilspezialist im Internet

www.ersatzteil-service.de www.ersatzteilplan.de

SERVICE MAINTENANCE GUIDE

AREA	MAINTENANCE	BEFORE USE	MONTHLY	YEARLY	DATE MAINTENANCE PERFORMED*
Air Filter	Clean/Replace	●			
Fuel Filter	Inspect/Replace		●		
Fuel Line	Inspect		●		
Spark Plug	Inspect/Clean/ Adjust/Replace		●		
Carburetor	Adjust			●	
Cooling System	Inspect/Clean		●		
Muffler (Spark Arrestor)	Inspect/Clean			●	
Vacuum Bag	Inspect/Replace	●			
Starter Rope	Inspect/Clean	●			
	Inspect/Repair	●			
	Inspect, Tighten/ Replace	●			

IMPORTANT

Time intervals shown are maximum. Actual use and your experience will determine the frequency of required maintenance.

*Record dates of monthly and yearly inspections

TROUBLESHOOTING

Problem Engine — starts hard — does not start			Cause	Remedy
Engine Cranks	Fuel at carburetor	No fuel at carburetor	Fuel strainer clogged Fuel line clogged Carburetor	Clean Clean See your dealer
	Fuel at cylinder	No fuel at cylinder	Carburetor	See your dealer
		Muffler wet with fuel	Fuel mixture is too rich	Open choke Clean/replace air filter Adjust carburetor See your dealer
	Spark at end of plug wire	No spark at end of plug wire	Ignition switch off Electrical problem Interlock switch	Turn switch on See your dealer See your dealer
	Spark at plug	No spark at plug	Spark gap incorrect Covered with carbon Fouled with fuel Spark plug defective	Adjust. 0.65 mm (0.026 in.) Clean or replace Clean or replace Replace plug
Engine does not crank			Internal engine problem	See your dealer
Engine runs	Dies or Accelerates poorly		Air filter dirty Fuel filter dirty Fuel vent plugged Spark plug Carburetor Cooling system plugged Exhaust port/spark arrestor screen plugged	Clean or replace Replace Replace Clean and adjust/replace Adjust Clean Clean

Ihr Ersatzteilspezialist im Internet

www.ersatzteil-service.de www.ersatzteilplan.de

SERVICE

AIR FILTER

NOTE
Clean daily.

1. Close choke, remove wing nut, air cleaner cover and air filter.
2. Brush dust off filter and wash in suitable solvent.

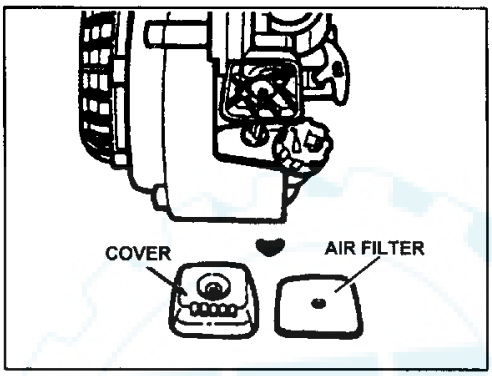

3. Dry filter before reinstalling.

ADJUSTING CARBURETOR

GENERAL

NOTE
Do not adjust carburetor unless necessary. If you have trouble with carburetor, see your dealer. Always adjust carburetor with pipes assembled to the blower.

The idle speed adjust screw controls the throttle opening at idle position.

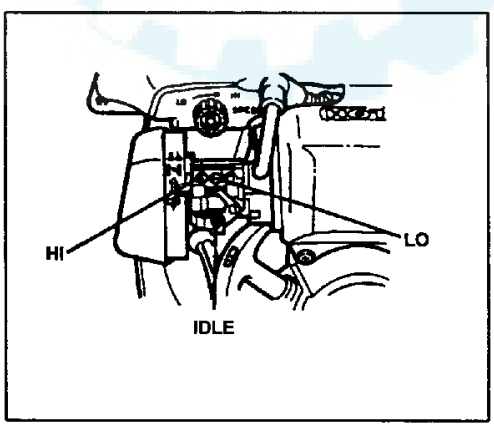

The low (LO) speed adjustment screw controls the volume of fuel/oil mixture at low engine speed. It also controls the supplementary fuel required to obtain smooth progression from idling to high speed.

The high (HI) speed adjustment screw controls the volume of fuel/oil mixture at full throttle.

INITIAL ADJUSTMENT

NOTE
The needle screws have a sharp point. To avoid carburetor damage, do not use excessive force when seating needle in body.

1. Turn HI and LO adjustment screws clockwise until seated lightly in carburetor body.
2. Turn LO adjustment screw counter clockwise 1-1/8 turn.
3. Start engine and allow it to run at high idle until warm (approx. 2-3 minutes).

NOTE
Idle speed screw may have to be readjusted to keep engine from stalling.

LOW SPEED ADJUSTMENT

1. Slowly turn the LO adjustment screw clockwise and note the position when the engine speed drops.
2. Turn the LO adjustment screw counter clockwise and note position when engine speed drops.
3. Set the screw midway between these points.
4. If a tachometer is available, turn idle speed clockwise until a speed of 2500-3400 RPM is achieved and engine idles without stalling.

HIGH SPEED ADJUSTMENT

NOTE
Engine must be at normal operating temperature.

1. Turn the HI adjustment screw counter clockwise 1-1/4 turn.
2. While running the engine at full throttle, turn the HI adjustment screw slowly clockwise until the engine runs smoothly.

Ihr Ersatzteilspezialist im Internet

www.ersatzteil-service.de www.ersatzteilplan.de

SERVICE

3. Turn the screw counter clockwise 1/8 turn to obtain optimum fuel mixture for full power under load conditions.

> NOTE
> Check engine acceleration from idle to full throttle. If engine hesitates, turn LO speed screw 1/16 to 1/8 of a turn counter clockwise.

COOLING SYSTEM MAINTENANCE

> **IMPORTANT**
> To maintain proper engine operating temperatures, cooling air **must** pass freely through the cylinder fin area to carry combustion heat away from the engine.
>
> Overheating and engine seizure can occur when:
>
> - Air intakes are blocked preventing cooling air from reaching the cylinder, or
> - Dust and grass build up on the outside of the cylinder. This build up insulates the engine and prevents the heat from leaving.
>
> Removal of cooling passage blockages or cleaning of cylinder fins is considered "Normal Maintenance". Any resultant failure attributed to lack of maintenance is not warranted.

CLEANING GRILLE

> NOTE
> The cooling system relies on cooling air entering the engine through a grille located between the fuel tank and starter.
>
> The cooling fan pushes this air through the cylinder area and out the forward facing opening in the engine cover.

1. Remove accumulated debris from intake grille.

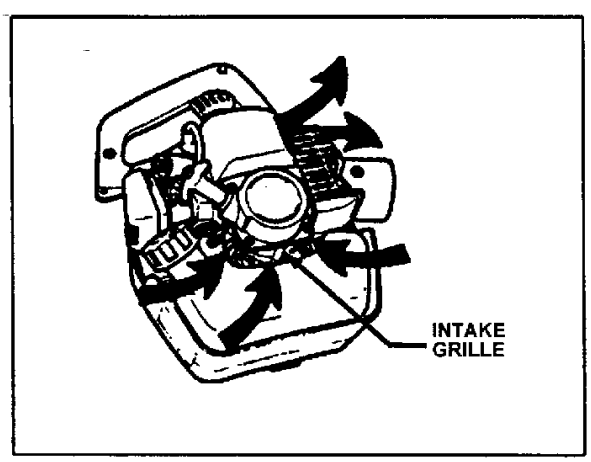

CLEANING CYLINDER FINS

1. Remove spark plug and engine cover (seven screws) and clean cylinder fins to allow cooling air to pass freely.

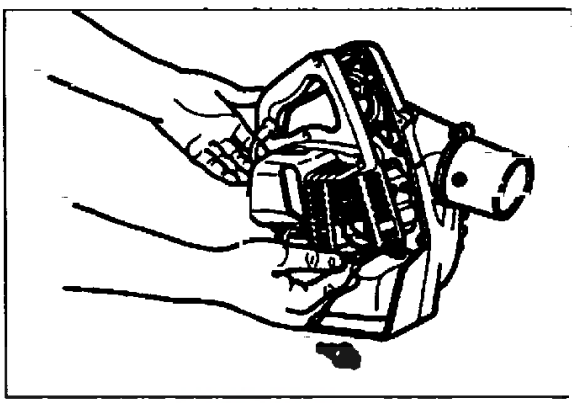

MUFFLER AND EXHAUST PORT

> NOTE
> Carbon deposits in cylinder exhaust port and muffler will cause a drop in engine output and overheating. Muffler exhaust port and spark arrestor screen must be checked periodically.

1. Remove spark plug and engine cover (seven screws).
2. Remove muffler cover, gasket and muffler.
3. Clean cylinder exhaust port being careful not to scratch cylinder or piston, using a wooden or plastic scraper.
4. Remove spark arrestor cover and spark arrestor screen from muffler. Replace screen if plugged with carbon deposits.
5. Install spark arrestor screen, gasket and cover.
6. Be sure gasket seals muffler halves.

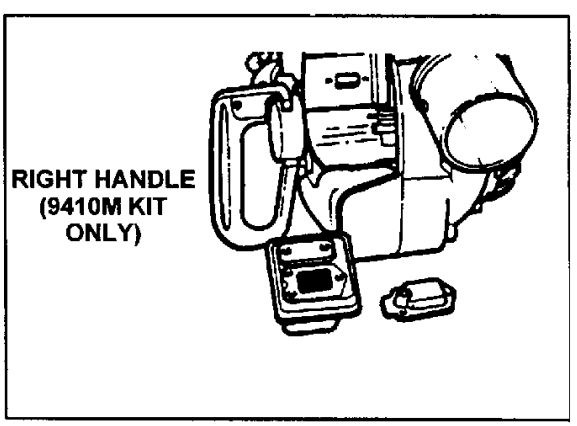

Ihr Ersatzteilspezialist im Internet

www.ersatzteil-service.de www.ersatzteilplan.de

SERVICE

SPARK PLUG

NOTE
Check spark plug periodically.

1. Clean stains or carbon off spark plug.
2. Adjust spark plug gap to 0.65 mm (0.026 in.).
3. Tighten spark plug to 145-155 kg/cm (125-135 in. lb.).

IMPORTANT
Do not overtighten spark plug.

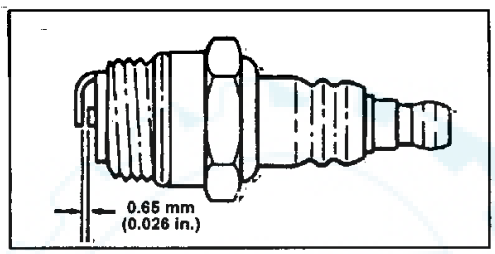

FUEL STRAINER

NOTE
Check fuel strainer periodically.

IMPORTANT
Keep fuel tank clean - do not allow dirt or debris to enter fuel tank.

NOTE
A clogged fuel strainer will cause hard starting or poor engine performance.

1. Pick up the fuel filter through fuel tank opening with a piece of steel wire.

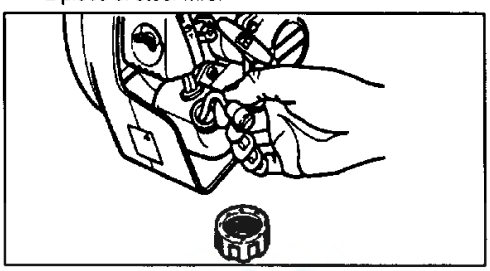

2. Remove old filter.
3. Install new filter.

VACUUM BAG (Part of Optional Kit 9410M)

Shake dust from bag and inspect for holes or tears. Inspect zipper and clean debris from teeth to assure complete closing of zipper.

ASSEMBLY

INSTALL BLOWER PIPES

1. Align grooves in straight pipe with pegs on blower housing and slide pipe onto housing.
2. Turn straight pipe clockwise to lock it into place.
3. Align grooves in fan head nozzle with pegs on straight pipe and slide fan head nozzle onto straight pipe.
4. Turn fan head nozzle clockwise to lock it into place.

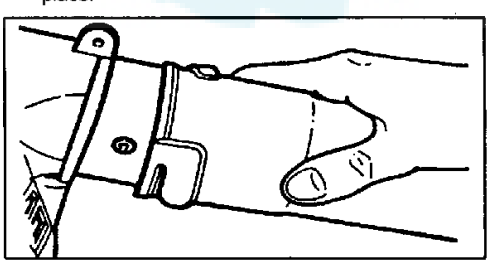

VACUUM KIT 9410M ASSEMBLY (Optional)

WARNING ⚠ DANGER

NEVER PERFORM MAINTENANCE OR ASSEMBLY PROCEDURES WITH ENGINE RUNNING.

INSTALL RIGHT HANDLE ASSEMBLY

1. Remove four 4x18 mm socket head screws from starter housing assembly.
2. Install right-hand handle assembly over starter housing and secure with four screw removed in #1

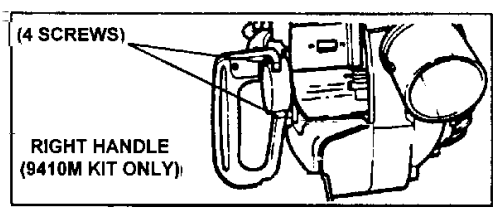

Ihr Ersatzteilspezialist im Internet

www.ersatzteil-service.de www.ersatzteilplan.de

ASSEMBLY

PIPE AND BAG ASSEMBLY

IMPORTANT
Never operate unit without either housing cover or vacuum tube installed securely on unit.

1. Turn knob (A) counter clockwise until housing cover is free and pull housing cover outward to gain access for vacuum tube installation.

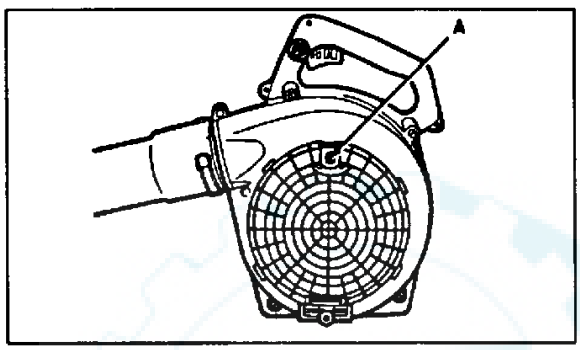

2. While holding housing cover open, install vacuum tube (with bevel facing down) into blower housing.
3. Secure vacuum tube with clamp (B).

NOTE
Clamp fits under slotted guide.

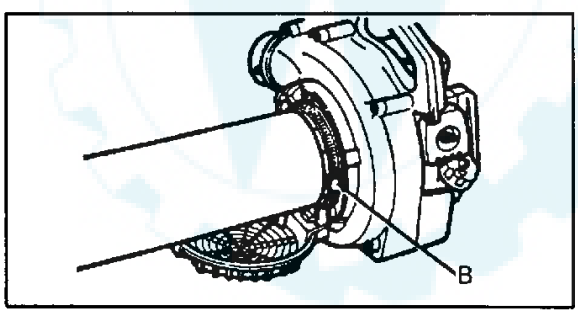

4. Align grooves in vacuum elbow with pegs on air outlet and install vacuum elbow.
5. Turn vacuum elbow clockwise to lock it into place.

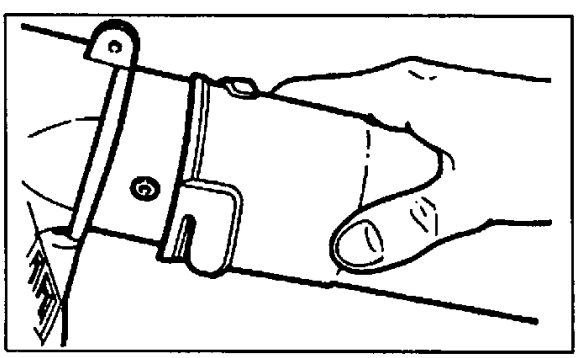

6. Place vacuum bag opening over end of vacuum elbow, and secure with velcro strap (C).

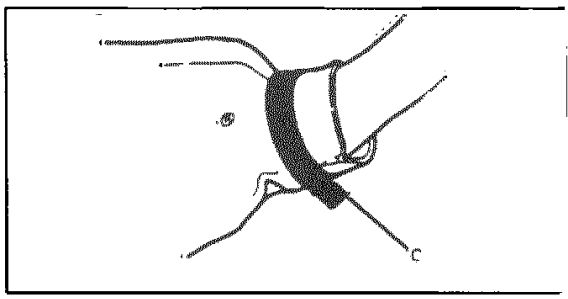

7. Place shoulder harness over right shoulder.
8. Make sure bevel at end of pipe faces downward.

Ihr Ersatzteilspezialist im Internet

www.ersatzteil-service.de www.ersatzteilplan.de

STORAGE

LONG TERM STORAGE (OVER 30 DAYS)

Do not store your unit for a prolonged period of time (30 days or longer) without performing protective storage maintenance which includes the following:

1. Store unit in a dry, dust free place, out of the reach of children.

WARNING ⚠ DANGER

DO NOT STORE IN ENCLOSURE WHERE FUEL FUMES MAY ACCUMULATE OR REACH AN OPEN FLAME OR SPARK.

2. Place the ignition switch in the "STOP" position.

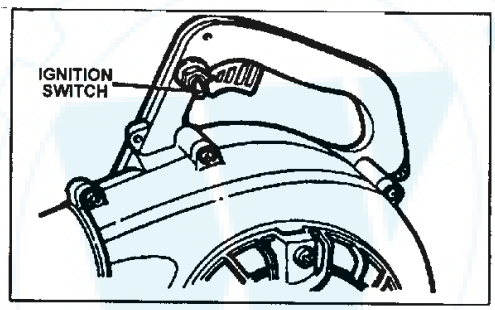

3. Remove accumulation of grease, oil, dirt and debris from exterior of unit.
4. Perform all periodic lubrication and services that are required.
5. Tighten all screws and nuts.
6. **Drain** the fuel tank **completely** and pull the starter handle several times to remove fuel from the carburetor.
7. Remove the spark plug and pour 1/4 oz. (1/2 tablespoon) of fresh, clean ECHO 2-stroke engine oil into the cylinder through the spark plug hole.
   - A. Place a clean cloth over the spark plug hole.
   - B. Pull the recoil starter handle 2-3 times to distribute the oil inside the engine.

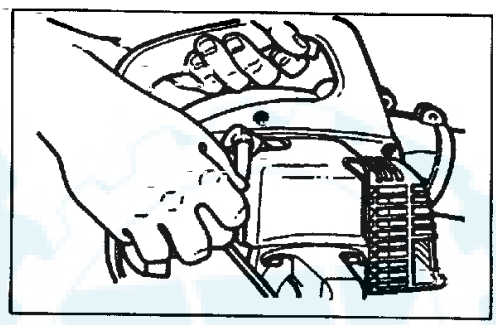

   - C. Observe the piston location through the spark plug hole. Pull the recoil handle slowly until the piston reaches the top of its travel and leave it there.
8. Install the spark plug (do not connect ignition cable).
9. Remove blower pipe assembly from unit.

Ihr Ersatzteilspezialist im Internet

www.ersatzteil-service.de www.ersatzteilplan.de

SPECIFICATIONS

		BLOWER	9410M KIT
Dimensions	Length	325mm (12.8 in.) w/o blower pipe	
	Width	220 mm (8.7 in.)	225 MM (8.9 in.)
	Height	330 mm (13.0 in.)	
Weight w/pipes (dry)		3.3 kg (7.3 lb.)	3.5 kg. (7.7 lbs.)
Engine	Type	Air-cooled, two-stroke, single cylinder gasoline engine	
	Bore	32.2 mm (1.268 in.)	
	Stroke	26.0 mm (1.024 in.)	
	Displacement	21.2 cc (1.29 cu. in.)	
Exhaust System		Spark arrestor muffler	
Carburetor		ZAMA diaphragm model C1U w/purge	
Ignition System	Spark Plug	NGK BPM-7A or Champion CJ-7Y 0.65mm (0.026 in.)	
Fuel System	Fuel	Mixed (gasoline and oil)	
	Fuel/Oil Ratio	50:1 ECHO High Performance 2-stroke engine oil	
	Fuel Tank Capacity	0.45 lit. (15.2 U.S. fl. oz.)	
Starter System		Automatic rewind starter Centrifugal type	
Vacuum Kit		Optional	

Ihr Ersatzteilspezialist im Internet

www.ersatzteil-service.de www.ersatzteilplan.de

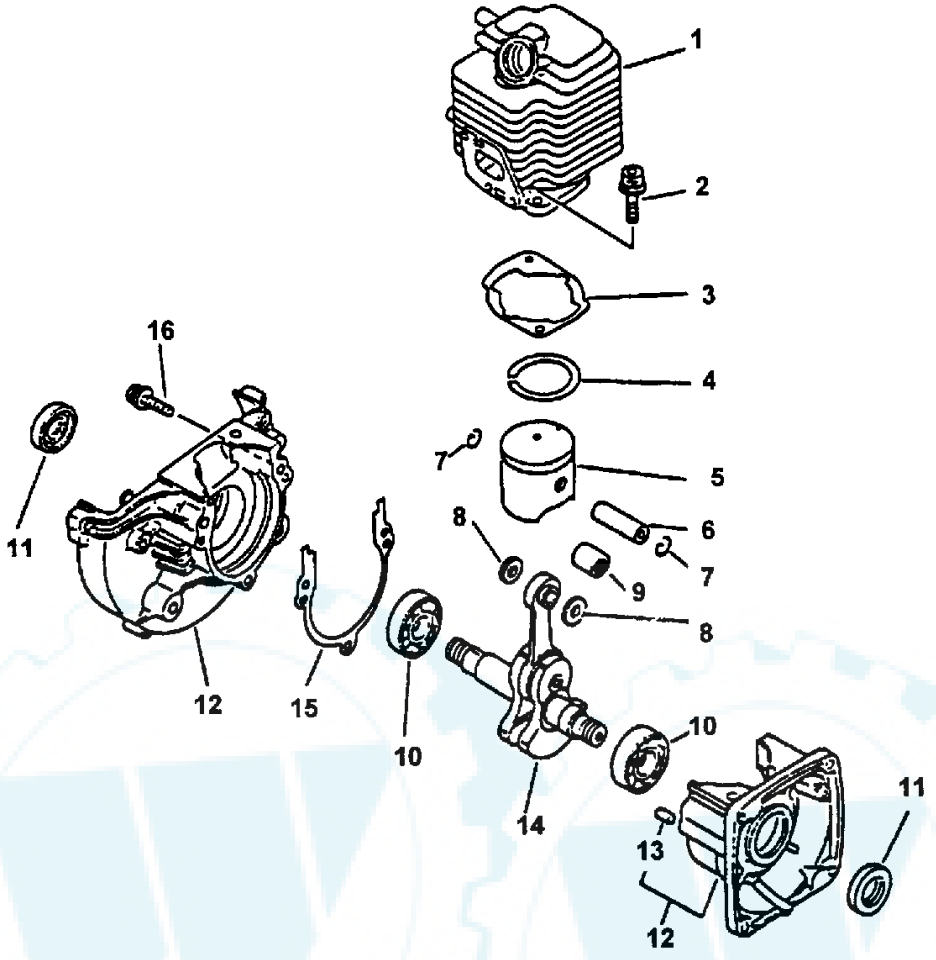

KEY	PART NUMBER	QTY	DESCRIPTION	REMARKS
1	10101145230	1	CYLINDER	
2	90016205022	2	BOLT, H.S. 5X22	
3	**10101044332**	1	GASKET, CYLINDER BASE	USE KIT 88900005063
4	10001105330	1	RING, PISTON	
5	10000044330	1	PISTON	INCLUDES ITEMS 4, 6 - 8
6	10001311520	1	PIN, PISTON	
7	10001504630	2	CIRCLIP	
8	10001411520	2	SPACER, PISTON PIN	
9	10001251230	1	BEARING, NEEDLE	
10	90081036201	2	BEARING, BALL 6201	
11	10021242030	1	OILSEAL	
12	10020042030	2	CRANKCASE SET	INCLUDES ITEM 13
13	10021503930	2	PIN, DOWEL	
14	**10010044732**	1	CRANKSHAFT ASY	
15	----------	1	GASKET, CRANKCASE	USE KIT 88900005063
16	**90016205028**	3	SCREW 5X28	

REVISED 12/95

Ihr Ersatzteilspezialist im Internet

www.ersatzteil-service.de www.ersatzteilplan.de

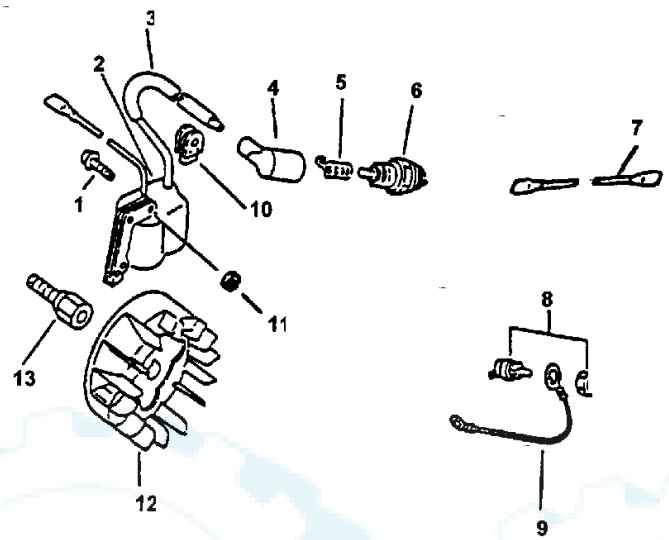

KEY	PART NUMBER	QTY	DESCRIPTION	REMARKS
1	**90016204022**	2	SCREW 4X22	
2	15862606360	1	C.D. IGNITION MODULE	
3	15661105060	1	TUBE	
4	15901201620	1	CAP, SPARK PLUG	
5	15901103432	1	COIL, SPARK PLUG CAP	
6	15901010630	1	PLUG, SPARK (BPM-7A)	
7	16201006861	1	LEAD	
8	16340003460	1	SWITCH, IGNITION	
9	16201005060	1	LEAD, GROUND	
10	15011205060	1	BUSHING	
11	15011709130	2	SPACER	
12	15880006360	1	FLYWHEEL	
13	**20001105661**	1	HUB, FAN	

REVISED 12/95

Ihr Ersatzteilspezialist im Internet

www.ersatzteil-service.de www.ersatzteilplan.de

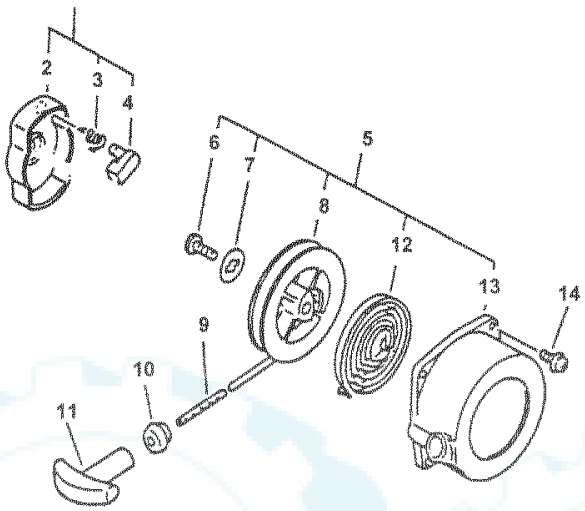

KEY	PART NUMBER	QTY	DESCRIPTION	REMARKS
1	17720244330	1	CATCHER ASY, PAWL	INCLUDES ITEMS 2 - 4
2	NSS	1	CATCHER, PAWL	
3	17723442030	1	SPRING, RETURN	
4	17721844330	1	PAWL, STARTER	
5	**17720042033**	1	STARTER ASY	INCLUDES ITEMS 6 - 13
6	17723644330	1	SCREW	
7	17721442030	1	WASHER	
8	**17721544430**	1	DRUM, STARTER	
9	----------	1	ROPE, STARTER	USE BULK ROPE 99944400040 DIA. 3.0MM (.12") X 1000MM (39.0")
10	17722742030	1	GUIDE, ROPE	
11	17722806530	1	GRIP, STARTER	
12	17722042030	1	SPRING, REWIND	
13	**17723242032**	1	CASE, STARTER	
14	**90016204018**	4	SCREW 4X18	

Ihr Ersatzteilspezialist im Internet

www.ersatzteil-service.de www.ersatzteilplan.de

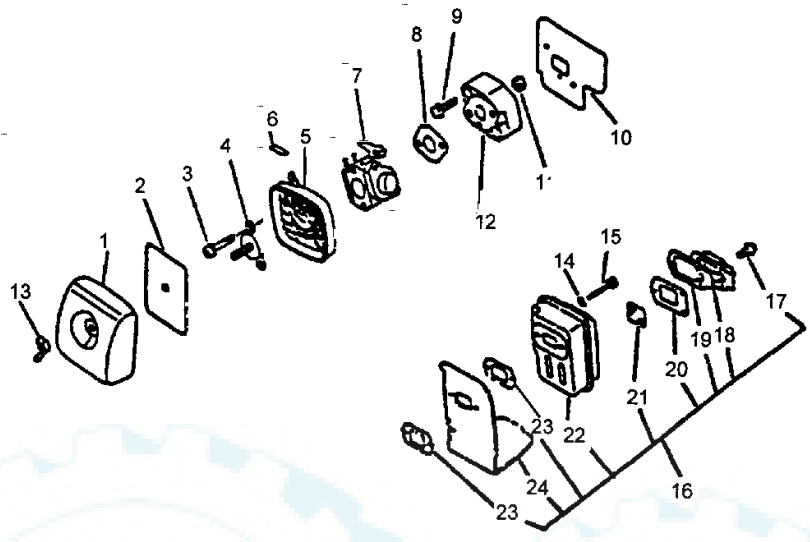

KEY	PART NUMBER	QTY	DESCRIPTION	REMARKS
1	**13031305861**	1	COVER, AIR CLEANER	
2	13031006560	1	FILTER, AIR	
3	**90024205065**	2	**SCREW 5X65**	
4	12901105060	1	PLATE, PREVENT	
5	**13030706791**	1	CASE, AIR CLEANER	
6	**89012106360**	1	LABEL, CHOKE	
7	12520006861	1	CARBURETOR C1U-K26A	
8	13001642031	1	GASKET, INTAKE	
9	90023805022	2	SCREW 5X22	
10	**13001005062**	1	GASKET, INTAKE	
11	90050000005	2	NUT	
12	**13001705061**	1	INSULATOR	
13	90052800005	1	NUT, WING 5	
14	90060000005	2	WASHER 5	
15	90010505055	2	BOLT, H.S. 5X55	
16	14580042031	1	MUFFLER ASY	INCLUDES ITEMS 17 - 24
17	90024204010	3	SCREW 4X10	
18	14587605060	1	LID, MUFFLER	
19	14587642030	1	PLATE	
20	14586642031	1	GASKET, MUFFLER ID	
21	14586240630	1	SCREEN, MUFFLER	
22		1	MUFFLER	ORDER MUFFLER ASY
23	14551042031	2	GASKET, MUFFLER	
24	14587105760	1	COVER, MUFFLER	

REVISED 12/95

Ihr Ersatzteilspezialist im Internet

www.ersatzteil-service.de www.ersatzteilplan.de

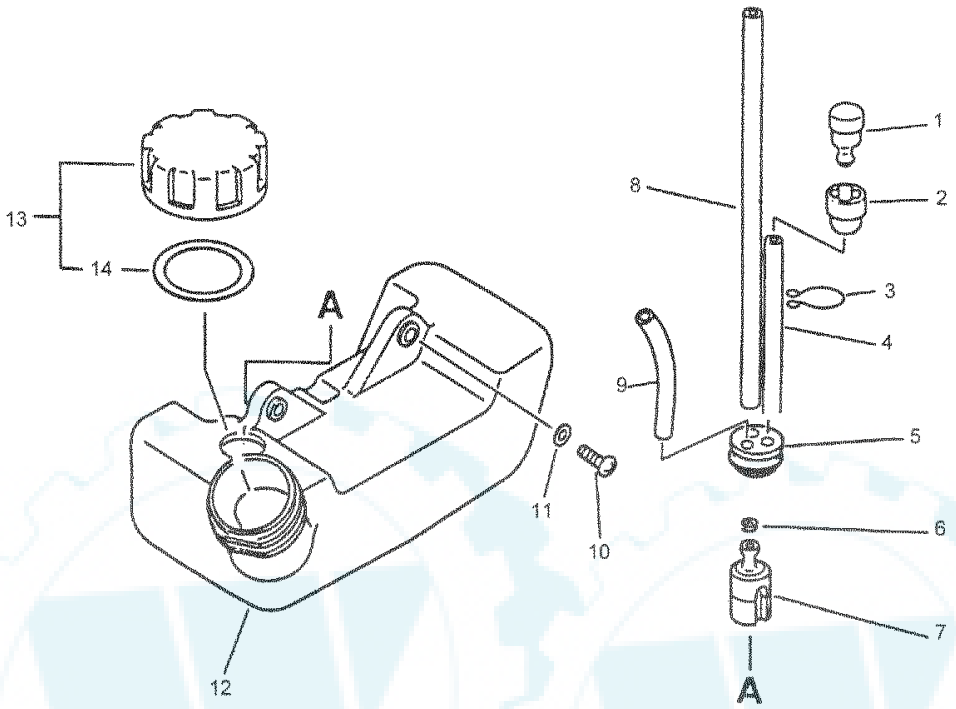

KEY	PART NUMBER	QTY	DESCRIPTION	REMARKS
1	13130040630	1	VENT	
2	13132840630	1	COVER, VENT	
3	13201305060	1	CLIP, PIPE	
4	13131244330	1	PIPE, FUEL	
5	13211546730	1	GROMMET	
6	13201309820	1	CLIP	
7	**13120514930**	1	STRAINER, FUEL	
8	13201013930	1	PIPE, FUEL	
9	13201251030	1	PIPE, FUEL	
10	90023805016	2	SCREW 5X16	
11	90060300005	2	WASHER 5	
12	**13100505760**	1	TANK, FUEL	
13	**13100441030**	1	CAP ASY, FUEL TANK	INCLUDES ITEM 14
14	13101640930	1	GASKET, FUEL TANK CAP	

REVISED 12/95

Ihr Ersatzteilspezialist im Internet

www.ersatzteil-service.de www.ersatzteilplan.de

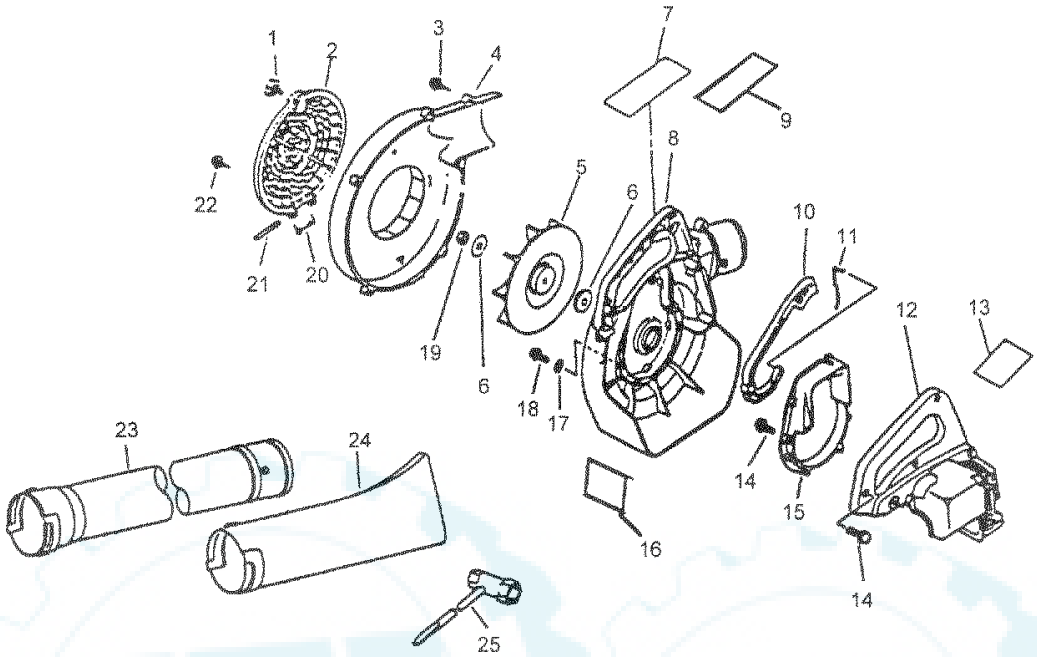

KEY	PART NUMBER	QTY	DESCRIPTION	REMARKS
1	**13040606360**	1	**KNOB**	
2	**20012405061**	1	GRID, FAN CASE (BL)	
3	90025305020	6	SCREW 5X20	
4	20010505660	1	CASE, FAN	
5	20001006362	1	FAN	
6	10013205660	2	WASHER 8	
7	**89011805670**	1	MODEL	
8	20011005660	1	CASE, FAN	
9	89017605660	1	LABEL, NOISE	
10	**17801006360**	1	CONTROL, THROTTLE (BL)	
11	17801105060	1	ROD, THROTTLE	
12	10400805660	1	COVER, ENGINE	
13	89019406360	1	LABEL, HOT	
14	90023804018	6	SCREW 4X18	
15	**10493005061**	1	BASE, ENGINE	
16	**89016003671**	1	LABEL, CAUTION	
17	10403205060	6	WASHER	
18	90023804022	5	SCREW 4X22	
19	90050000008	1	NUT 8	
20	20015205060	1	SPRING, COVER	
21	20015005060	1	SHAFT, COVER	
22	90025305014	9	SCREW 5X14	
23	**21002006360**	1	PIPE, STRAIGHT (BL)	
24	21003105060	1	NOZZLE, FAN HEAD (BL)	
25	**89541002830**	1	WRENCH, W/SCREWDRIVER	

REVISED 12/95

Ihr Ersatzteilspezialist im Internet

www.ersatzteil-service.de www.ersatzteilplan.de

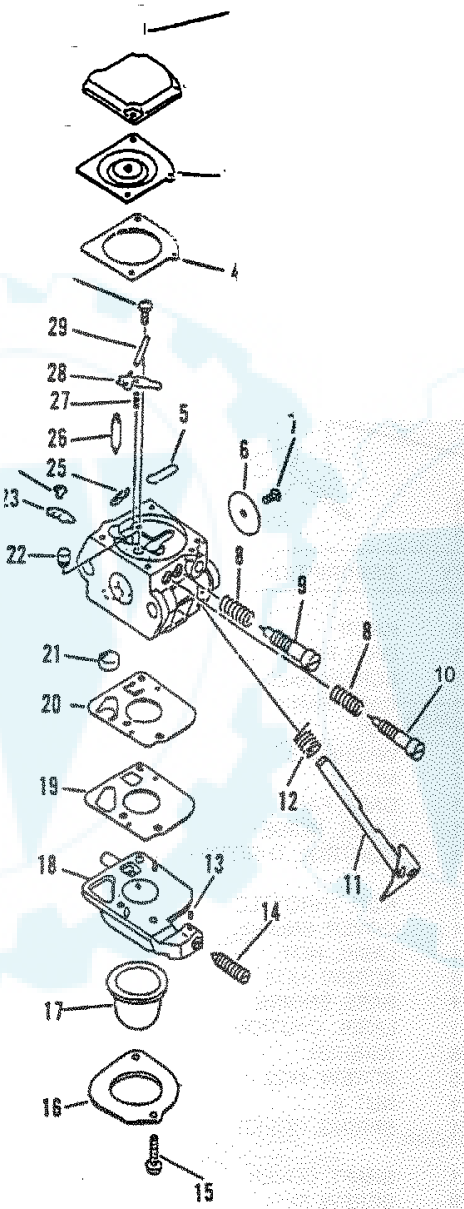

Ihr Ersatzteilspezialist im Internet

www.ersatzteil-service.de www.ersatzteilplan.de

KEY	PART NUMBER	QTY	DESCRIPTION	REMARKS
	12520006861	1	CARBURETOR C1U-K26A	INCLUDES THE FOLLOWING
1	12534413931	2	SCREW	
2	12534215130	1	COVER, DIAPHRAGM	
3	A B	1	DIAPHRAGM	
4	A B	1	GASKET, DIAPHRAGM	
5	B	1	PLUG, WELCH	
6	12531642030	1	VALVE, THROTTLE	
7	12531413930	1	SCREW	
8	12531942030	2	SPRING, COIL	
9	12532007260	1	NEEDLE, HIGH SPEED	
10	12531851330	1	NEEDLE, IDLE	
11	12531705060	1	SHAFT, THROTTLE	
12	12531342030	1	SPRING, THROTTLE RETURN	
13	12537813930	1	PIECE, FRICTION	
14	12533406860	1	SCREW, IDLE ADJUST	
15	12531011610	2	SCREW	
16	12536311610	1	RING	
17	12538146730	1	PUMP. PRIMER	
18	12532411610		COVER, PUMP	
19	A B		GASKET, FUEL PUMP	
20	A B		DIAPHRAGM, FUEL PUMP	
21	B	1	STRAINER	
22	12537606360	1	NOZZLE, CHECK VALVE	
23	12535005060	1	LEVER, THROTTLE	
24	12534813930	1	SCREW	
25	12532713930	1	CLIP	
26	B	1	VALVE, NEEDLE	
27	B	1	SPRING, COIL	
28	B	1	ARM, VALVE	
29	B	1	PIN	
30	12533942030	1	SCREW	
A	12530342030	1	GASKET/DIAPHRAGM KIT	
B	12530042030	1	REPAIR KIT	

ACCESSORIES

9410M VACUUM KIT **SEE PAGE 26 FOR PARTS BREAKDOWN**

Ihr Ersatzteilspezialist im Internet

www.ersatzteil-service.de www.ersatzteilplan.de

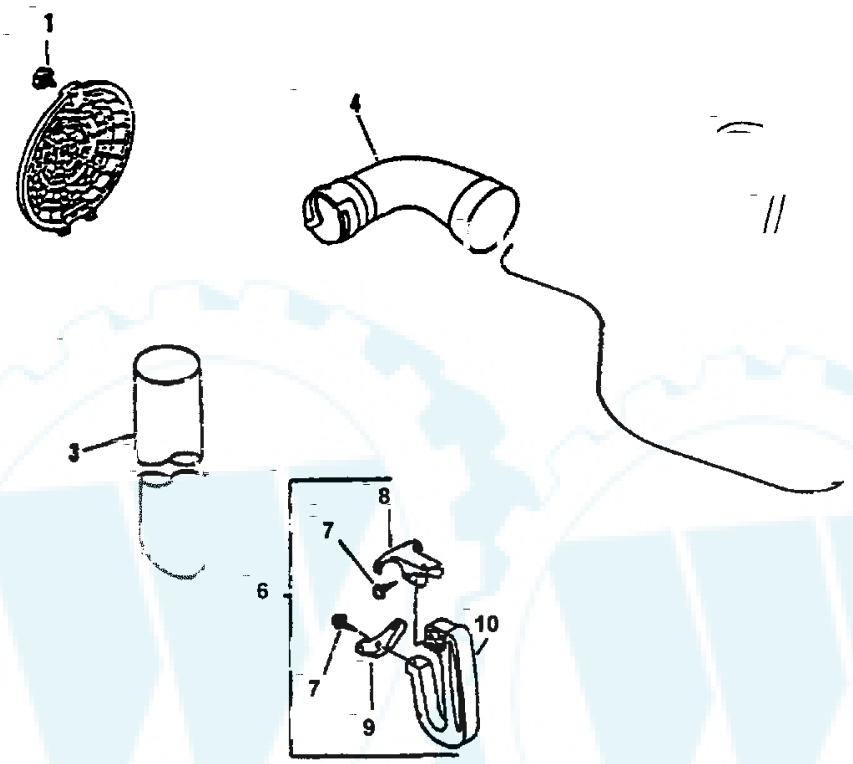

KEYPART NUMBER			DESCRIPTION	REMARKS
	9410M	1	DUST BAG KIT	INCLUDES ITEMS 1 -10
1	13040606360	1	KNOB	
2	21041305060	1	CLAMP	
3	21002706562	1	PIPE, SUCTION	
4	21501205060	1	CONNECTOR	
5	88051407960	1	BAG, DUST	
6	35100005060	1	HANDLE ASY	INCLUDES ITEMS 7 - 10
7	90024605014	3	SCREW 5X14	
8	35101154330	1	BRACKET, HANDLE (U)	
9	35102854330	1	BRACKET, HANDLE (L)	
*10	NSS	1	HANDLE	(ORDER ITEM 6)

Ihr Ersatzteilspezialist im Internet

www.ersatzteil-service.de www.ersatzteilplan.de

INTRODUCTION

This Power Blower is a lightweight, high performance, gasoline powered unit designed for blowing a wide variety of debris.

A vacuum kit Model 9410M may be purchased as an accessory from your dealer.

This manual provides the information necessary for operation and maintenance.

WARNING ⚠ DANGER

IMPROPER USE OR CARE OF THIS UNIT, OR FAILURE TO WEAR PROPER PROTECTION CAN RESULT IN SERIOUS INJURY. READ AND UNDERSTAND THE RULES FOR SAFE OPERATION AND ALL INSTRUCTIONS IN THIS MANUAL. WEAR EYE AND HEARING PROTECTION.

SAFETY AND SPECIAL INFORMATION

WARNING ⚠ DANGER

THIS SYMBOL IS USED TO CALL ATTENTION TO PROCEDURES THAT MUST BE FOLLOWED TO AVOID THE RISK OF SERIOUS, IMMEDIATE AND IRREVERSIBLE HUMAN INJURY OR DEATH.

IMPORTANT
Indicates a situation that may cause damage to equipment.

NOTE
Draws attention to special information.

- Read and understand the entire operator's manual before using this machine.
- Follow all danger warnings in this manual.
- Locate the safety decals on your blower. Make sure the decals are legible and that you understand and follow them. See Description Section for location of decals.

⚠ WARNING ⚠

The engine exhaust from this product contains chemicals known to the State of California to cause cancer, birth defects or other reproductive harm.

CONTENTS

	PAGE NO.
Introduction	2
Safety	3
Description	5
Fuel	6
Operation	6
Service Maintenance Guide	8
Troubleshooting	8
Service	9
Assembly	11
Storage	
Specifications	
Parts List	16

Specifications, descriptions and illustrative material in this literature are as accurate as known at the time of publication, but are subject to change without notice. Illustrations may include optional equipment and accessories, and may not include all standard equipment.

Ihr Ersatzteilspezialist im Internet